PROJECT 06: Design and Analysis of Cascode Common Source Amplifier by using Cadence Virtuoso

A Comprehensive Study of Analog Circuits

By: Priya Chaudhary, Astitva Johri and

Bhavya Solanki

Chapters:

List of Figures……..…… 3

1. Introduction …….. 4
2. Brief Description…… 5
3. Circuit Design……. 6-7
   3.1 Schematic Design……..……... 6
   3.2 DC Bias Analysis…….... 6
   3.3 Transient Analysis…… 6
   3.4 Optimization……...…… 7
4. Simulation Results…….. 8
5. Advantages and Disadvantages…….. 9
   5.1 Advantages……. 9
   5.2 Disadvantages……. 9
6. Conclusion…….. 10
7. Frequently Asked Questions (FAQs)…….. 11

LIST OF FIGURES

Figure 3.1 Circuit of Cascode Common Source Amplifier..…… 7

Figure 3.2 Symbol of Cascode Common Source Amplifier..…... 7

Figure 4.1 Simulation Results of Cascode Common Source Amplifier (DC Response)…..……..... 8

Figure 4.2 Simulation Results of Cascode Common Source Amplifier (Transient Response)…..……...…… 8

1. INTRODUCTION

The cascode common source amplifier is a cornerstone in the field of analog circuit design, known for its superior performance characteristics compared to basic amplifier configurations. This topology addresses critical challenges like low gain, limited bandwidth, and high distortion, which are prevalent in simpler designs. By stacking a common-source amplifier with a common-gate stage, the cascode configuration achieves significant improvements in gain, bandwidth, and output impedance.

This document provides a step-by-step guide to designing and analyzing a cascode common source amplifier using Cadence Virtuoso. With its robust simulation and design tools, Cadence Virtuoso allows designers to implement, test, and optimize circuits with precision, ensuring that the amplifier meets the desired specifications for high-performance applications.

2. BRIEF DESCRIPTION

The cascode amplifier combines two fundamental amplifier stages: a common-source stage and a common-gate stage. The key attributes of this configuration include:

1. **Common-Source Stage:**
   - Provides the primary amplification.
   - Converts the input voltage signal into an amplified output. ○ May experience gain and bandwidth limitations due to the Miller effect.
2. **Common-Gate Stage:**
   - Addresses the shortcomings of the common-source stage by reducing the Miller capacitance.
   - Offers improved bandwidth and stability. ○ Increases the overall output impedance, making it suitable for driving high-impedance loads.
3. **Integration Benefits:**
   - Combines the strengths of both stages to deliver high gain and extended bandwidth.
   - Minimizes signal distortion and ensures better isolation between input and output.

Applications of the cascode amplifier include high-frequency circuits like RF amplifiers, analog signal processors, and communication systems, where its superior performance metrics are critical.

3. CIRCUIT DESIGN

3.1 Schematic Design

Design Steps:-

1. Launch Cadence Virtuoso and create a new schematic cell view.
2. Place the MOSFETs and connect them in a cascode configuration.
3. Add appropriate biasing and load components.
4. Verify the connections and ensure proper node labeling for simulation.

3.2 DC Bias Analysis

1. Open the Analog Design Environment (ADE) in Cadence Virtuoso.
2. Set up the DC analysis to measure node voltages and currents.
3. Verify that the MOSFETs are operating in the desired regions.

3.3 Transient Analysis

1. Apply a test signal (e.g., sinusoidal or pulse) at the input.
2. Measure the output waveform and analyze signal integrity, rise time, and distortion.

3.4 Optimization

1. Adjusting component values to improve gain and bandwidth.
2. Minimizing power consumption while maintaining performance
3. Ensuring stability through frequency compensation techniques if needed.

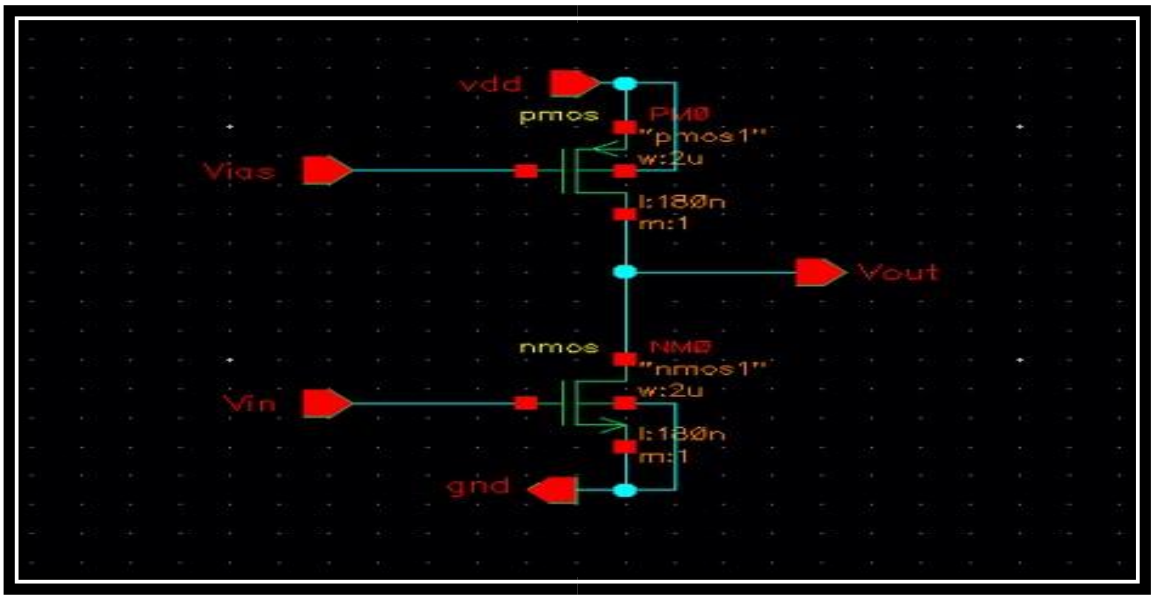

Figure 3.1 Circuit of Cascode Common Source Amplifier

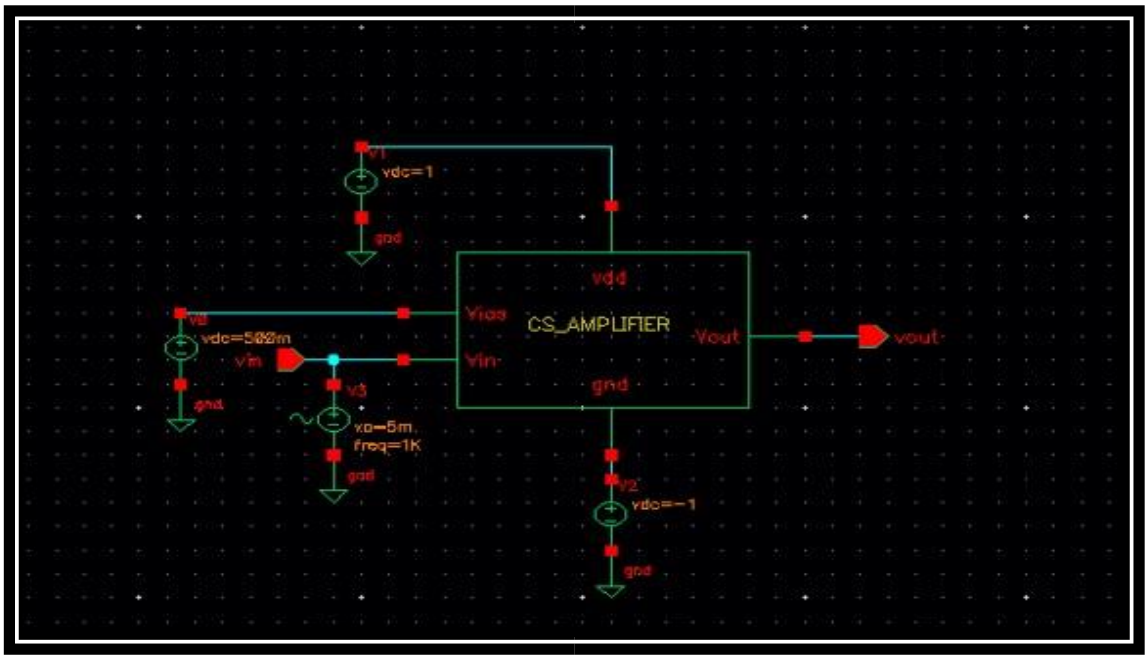

Figure 3.2 Symbol of Cascode Common Source Amplifier

4. SIMULATION RESULTS

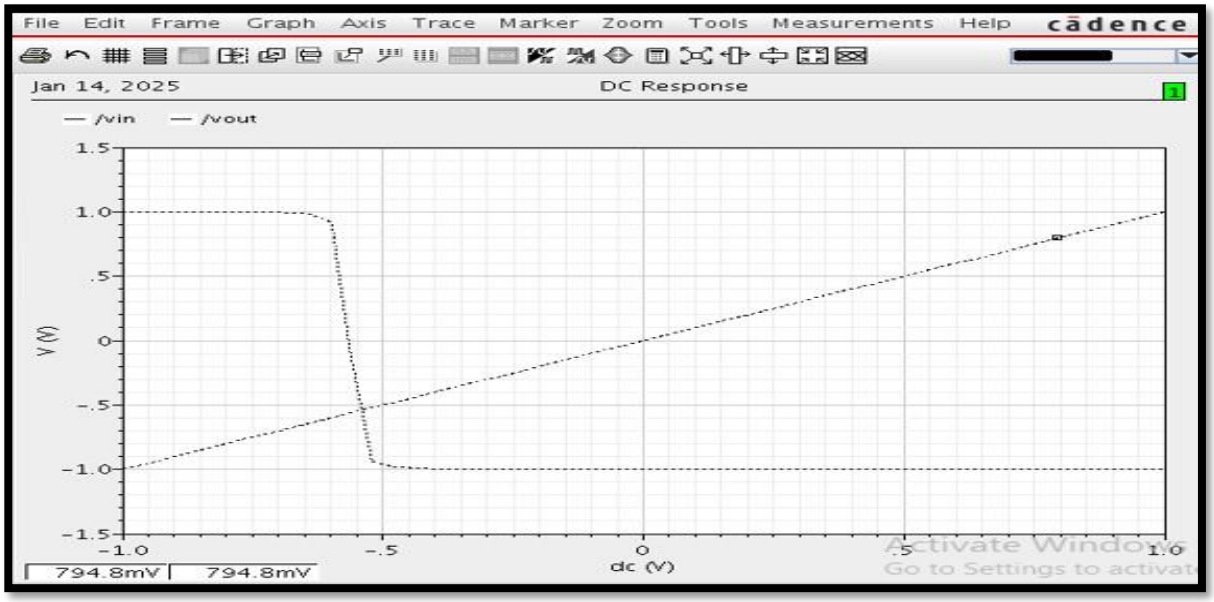

Figure 4.1: Simulation Results of Cascode Common Source Amplifier (DC Response)

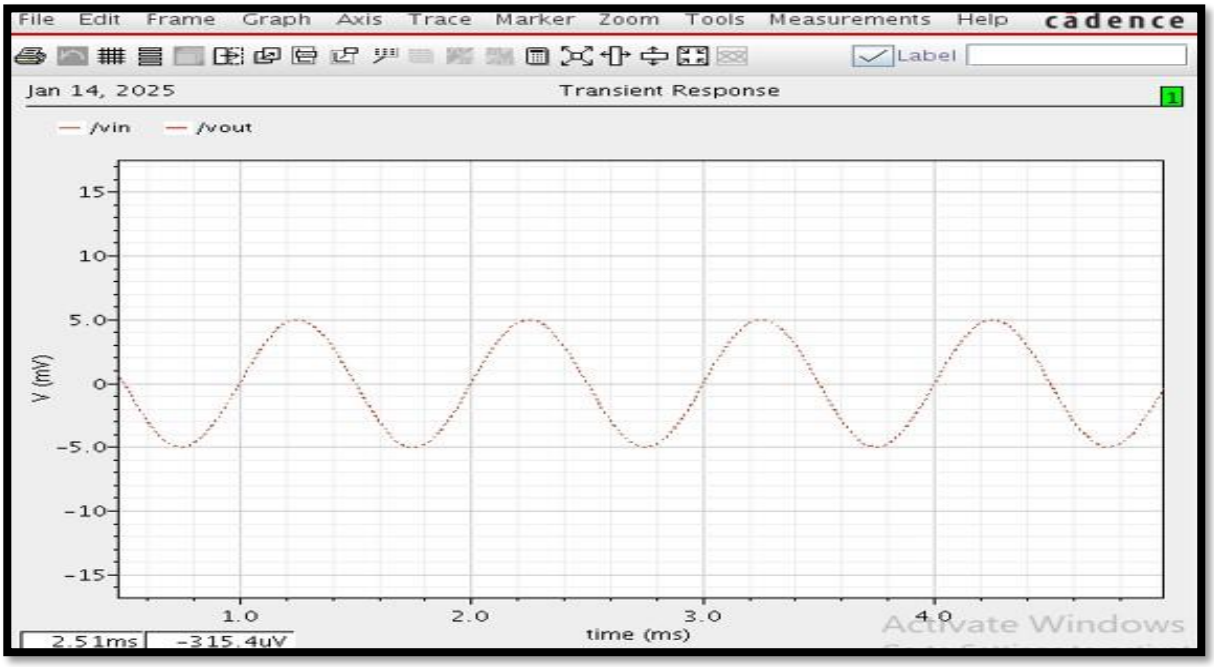

Figure 4.2 Simulation Results of Cascode Common Source Amplifier (Transient Response)

5. ADVANTAGES AND DISADVANTAGES

5.1 Advantages:-

1. **High Gain:** Cascoding increases the amplifier's overall voltage gain.
2. **Improved Bandwidth:** Reduces the Miller effect, resulting in a wider frequency response.
3. **High Output Impedance:** Enables better driving of high-impedance loads.
4. **Input-Output Isolation:** Reduces signal feedback, improving overall stability.
5. **Enhanced Stability:** Suitable for high-frequency applications due to minimized parasitic effects.

5.2 Disadvantages:-

1. **Increased Complexity:** Requires more components compared to single-stage amplifiers.
2. **Precise Biasing Required:** Ensures proper operation and prevents distortion.
3. **Higher Power Consumption:** Additional components contribute to greater energy usage.
4. **Potential Stability Issues:** May require compensation techniques for ultra-high frequencies.
5. **Design Challenges:** Complex layout and tuning in integrated circuits.

6. CONCLUSION

The cascode common source amplifier is a sophisticated and highly effective topology in analog circuit design, offering significant advantages over single-stage amplifiers. Its primary benefits include:

1. **Enhanced Performance:**
    - High voltage gain and extended bandwidth make it ideal for demanding applications.
2. **Improved Stability:**
    - By minimizing the Miller effect and increasing output impedance, the topology ensures stable operation at high frequencies.
3. **Design Versatility:**
    - Suitable for a wide range of applications, including RF circuits, signal processors, and high-speed communication systems.
4. **Scalability:**
    - The design can be adapted for different process technologies and performance requirements, making it a versatile choice for modern electronic systems.

By leveraging the advanced capabilities of Cadence Virtuoso, designers can efficiently create and optimize the cascode common source amplifier. The simulation tools provide invaluable insights into circuit performance, allowing for precise adjustments to meet stringent specifications. Despite its complexity, the cascode amplifier's superior performance metrics justify its use in high-performance analog design, ensuring reliable and efficient operation across various applications.

7. FREQUENTLY ASKED QUESTIONS (FAQs)

Q1: Why is the cascode configuration preferred over a single-stage amplifier?

Answer: The cascode configuration improves gain, bandwidth, and stability while reducing the Miller effect, making it more suitable for highfrequency applications.

Q2: What tools in Cadence Virtuoso are essential for this design?

Answer: The schematic editor, Analog Design Environment (ADE), and waveform viewer are essential for designing and analyzing the amplifier**.**

Q3: How do I ensure that the MOSFETs operate in the desired region?

Answer: Perform DC bias analysis to verify that the drain-source voltage (Vds) and gate-source voltage (Vgs) are within the required ranges for saturation operation.

Q4: Can I use PMOS devices instead of NMOS?

Answer: Yes, PMOS devices can be used, but the biasing and design considerations may vary based on the specific application.

Q5: What are common challenges in designing a cascode amplifier?

Answer: Challenges include achieving proper biasing, managing stability at high frequencies, and minimizing power consumption while maintaining performance.